INSTRUCTIONS FOR INSTALLATION, OPERATION AND MAINTENANCE TENDER made in EU

1. INSTALLATION

1.1 The electric pump should be installed as close to the pool as possible. In this way, we achieve the highest efficiency and avoid loss of power due to load, always referring to the original diameter of the PVC accessories supplied with the accessories. We recommend that you never place the pump more than 15 meters away.
The electric pump is not a self-priming device, therefore it must always be installed below the water level.
The technical place of installation or the room ready for installation of the device should have adequate ventilation, or if necessary, be equipped with forced ventilation, thanks to which we achieve optimal cooling of the engine and thus avoid steam condensation. In this way, perfect operation of the TENDER installation can be guaranteed.

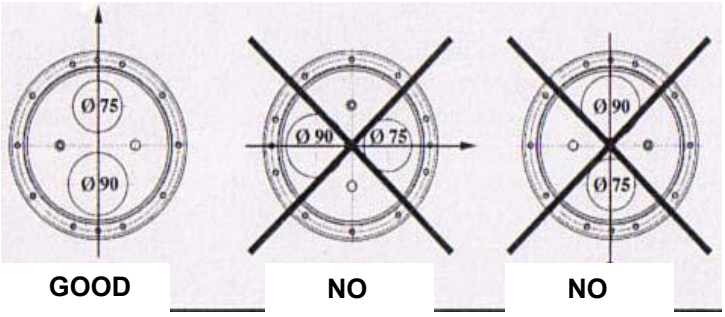

2. HOUSING FASTENING

2.1 When installing the housing, make sure that the accessories are mounted in the position described below:
The connections for the drive Ø 75 mm and the suction pipe Ø 90 mm are installed vertically with the drive (Ø 75 mm) at the top and the connection for the suction pipe (Ø 90 mm) at the bottom (see fig. 1).
We must also pay attention that the distance between the water surface and the axis of the propeller nozzle is approx. 30 cm (see Fig. 1).
In order to guarantee the correct installation and perfect operation of the equipment, it is essential to follow the above recommendations.

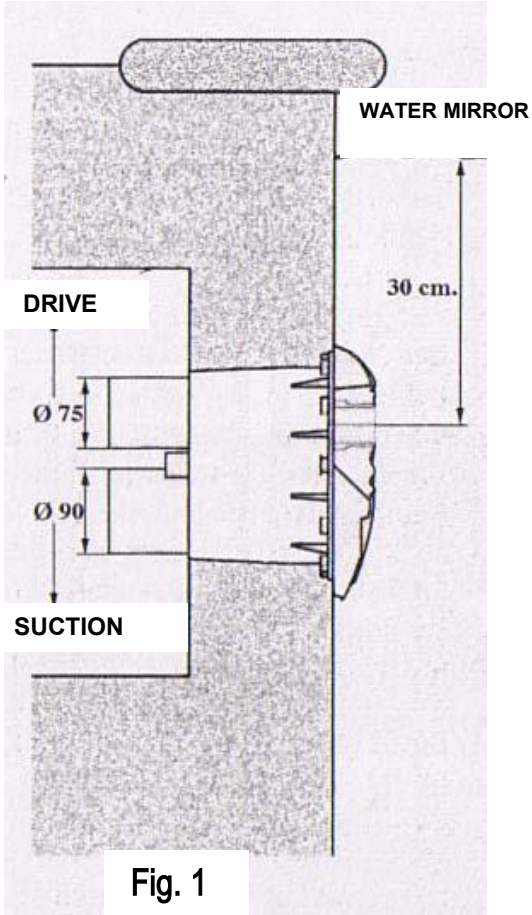

Fig. 1

DEVICE DIAGRAM

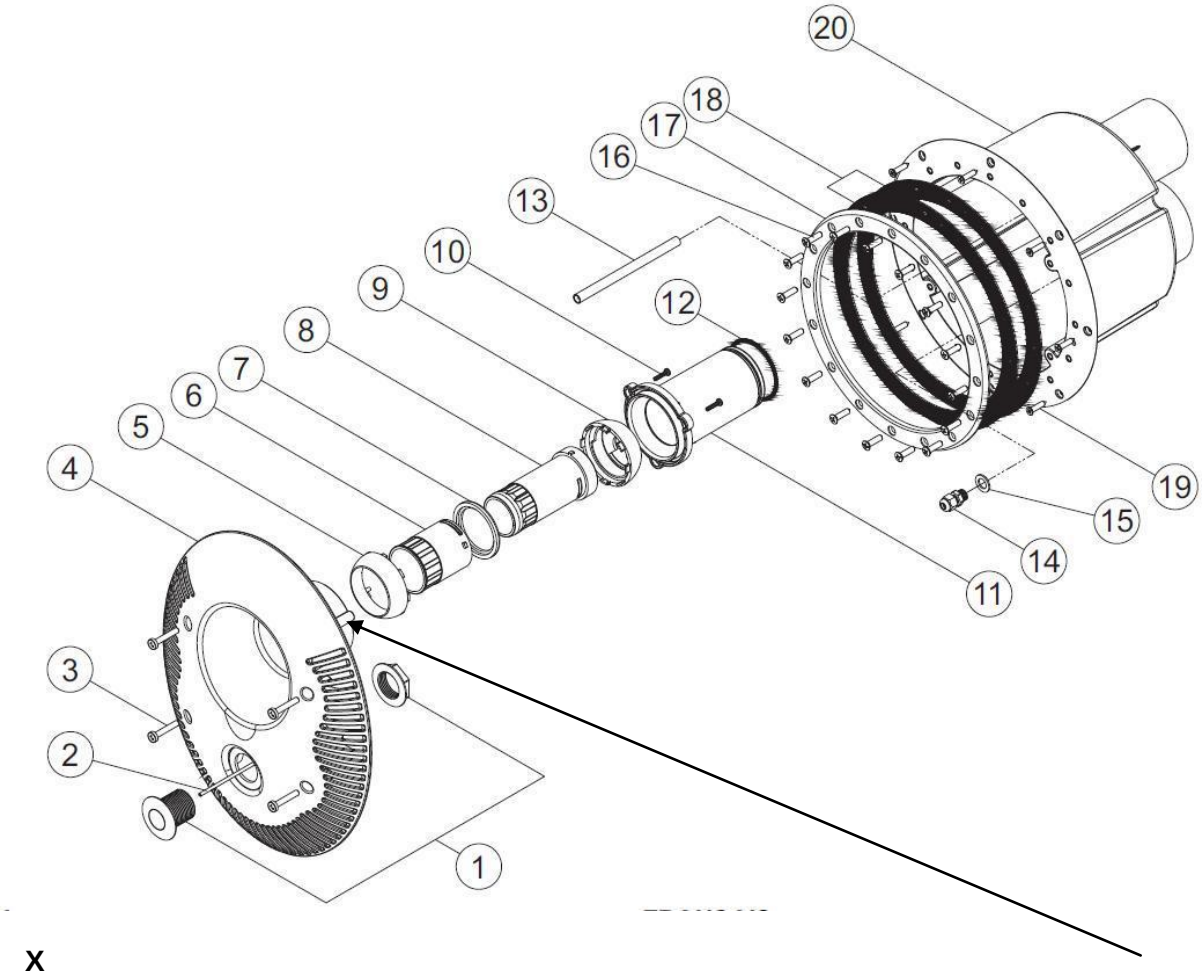

CASING

Depending on the type of the pool structure, embed the housing No. 20 in the pool wall according to the diagrams

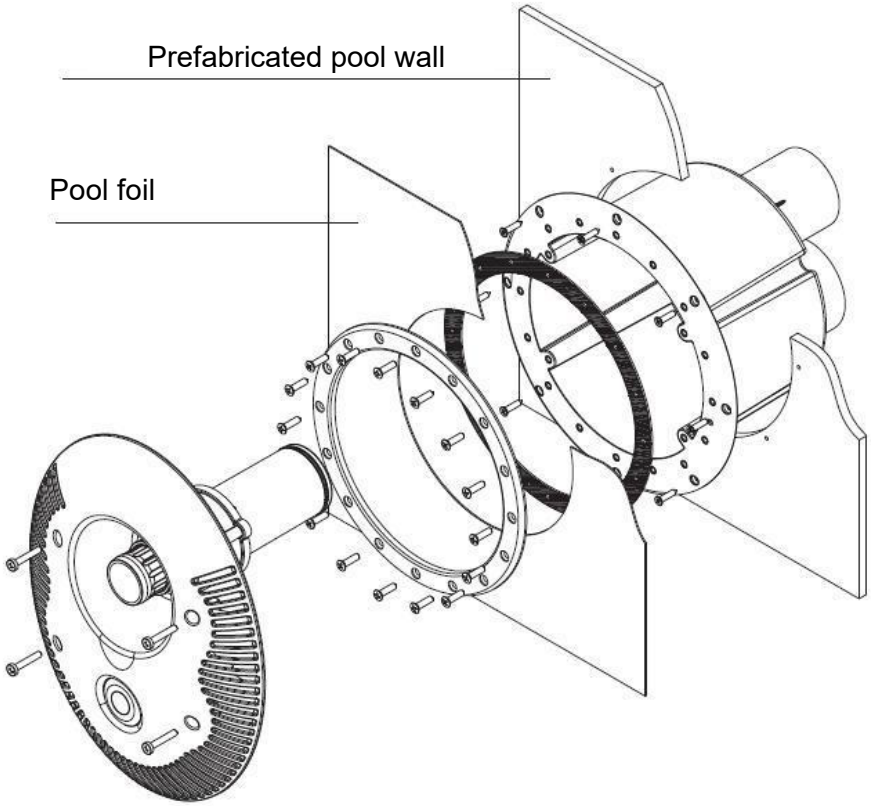

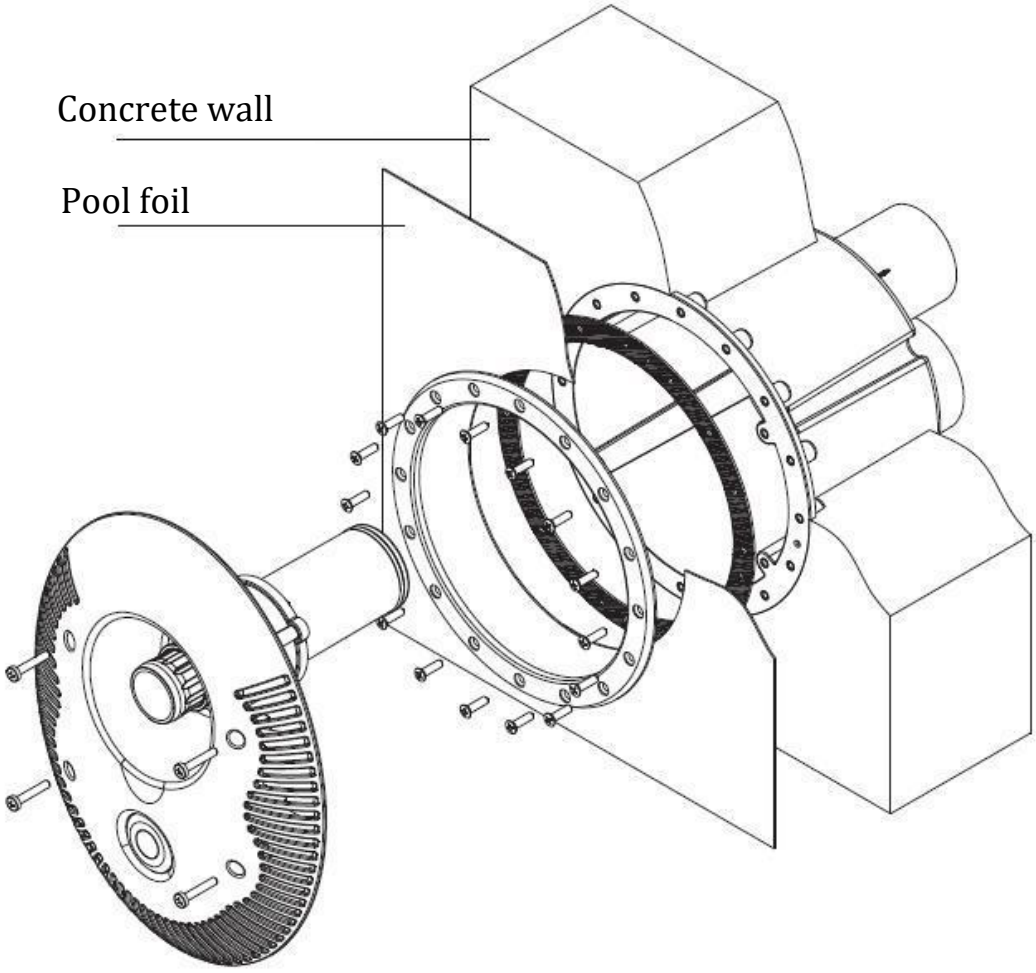
Concrete wall
Pool foil

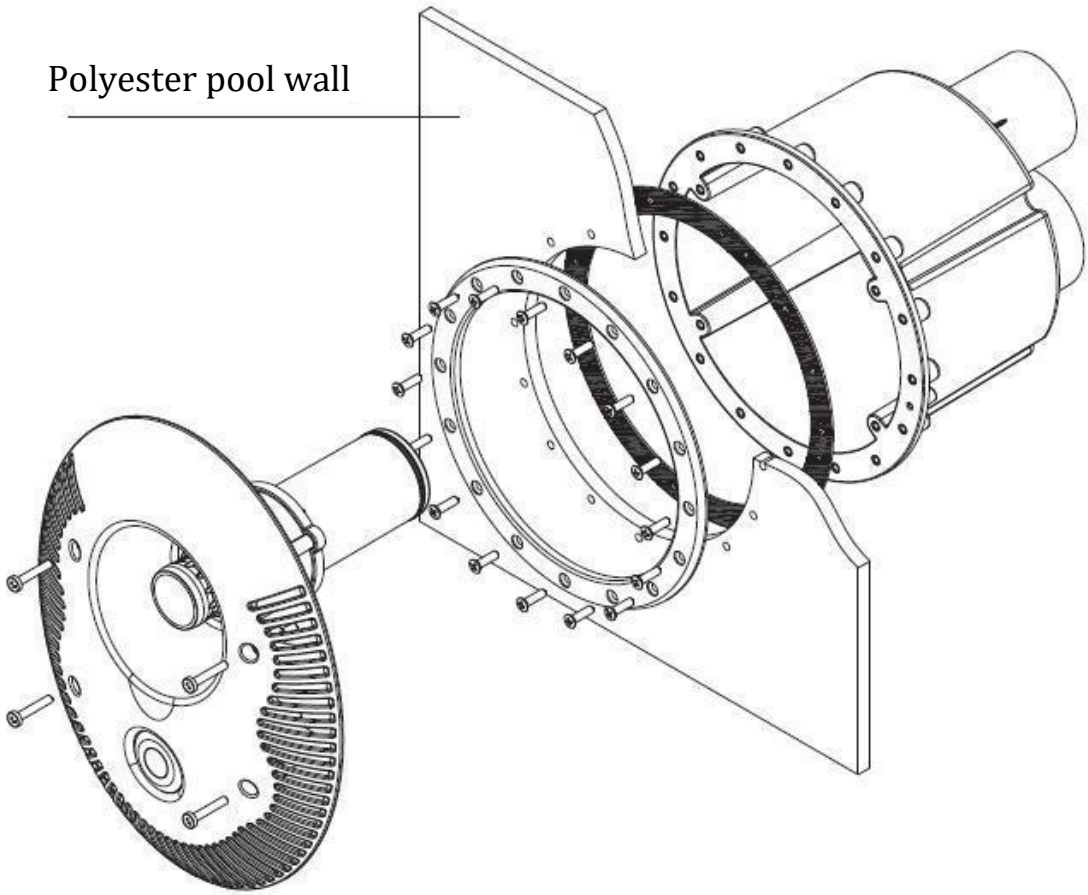
Polyester pool wall

FRONT PANEL ASSEMBLY
The faceplate is delivered complete.
To assemble the complete faceplate, proceed as follows:
- lead the colorless pneumatic tube no. 2 through the gland no. 14, 15 in housing no. 20
- connect the pipe of the air conduit no. 13, putting it on the pipe protruding from the side X
- connect the colorless pneumatic tube No. 2 to the pneumatic switch No. 1
- lead a 20 mm pipe from the housing, terminated with a check valve with a basket, about 15 cm above the water level.
- slide the complete faceplate into the housing, making sure that the sealing ring no. 12 rests in the drive hole (Ø 75 mm) in the housing
- then tighten screws no. 3 and the faceplate is installed.

Installation of the PVC kit for the Tender 70 m3 model:
Before gluing the elements, put them together without glue.
Installing the discharge line: (see figure below).

- connect a reduction sleeve 75x63 mm (no. 1) to the housing connection
- connect the Ø 63 mm pipe with a reduction sleeve (no. 1).
- connect the valve Ø 63 mm (No. 2) with the pipe Ø 63 mm.
- connect the Ø 63 mm pipe with the Ø 63 mm valve (No. 2).
- connect the bend Ø 63 mm (No. 3) with the pipe Ø 63 mm.
- connect the pipe Ø 63 mm with the elbow (No. 3).
- connect the conical reduction 75/63 mm (no. 4) with the pipe Ø 63 mm and the pump connection Ø 75 mm.

Minimum shaft dimensions:

MODEL	A	B	C
70 m3	165	1005	700

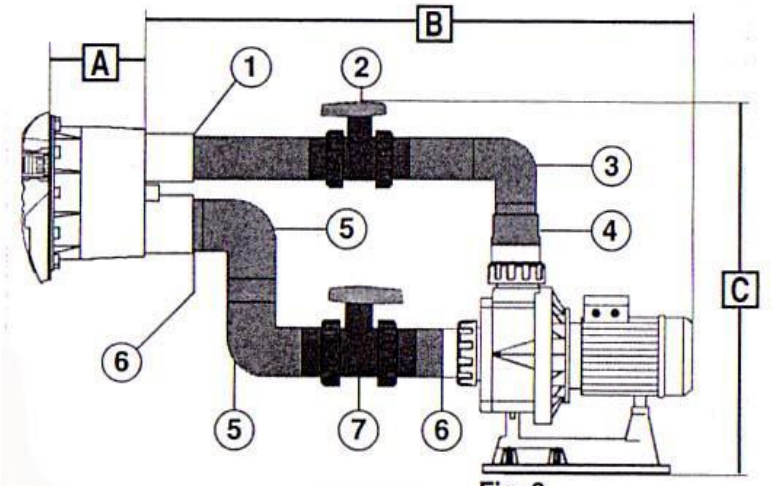

Fig. 6

Installing the suction tube: (see the drawing above).
- connect a 90x75 mm reduction sleeve (no. 6) to the suction connection of the housing.
- use a Ø 75 mm pipe and connect it to the Ø 75 mm elbow (No. 5) with a reduction sleeve (No. 6).
- using a Ø 75 mm pipe, connect the second Ø 75 mm elbow (no. 5) with the already glued elbow.
- connect the 75 mm Ø valve (No. 7) with the 75 mm Ø elbow (No. 5), using a Ø 75 mm pipe.
- connect the pipe Ø 75 mm with the valve (no. 7).
- connect the reduction sleeve 90x75mm (no. 6) with the pipe Ø 75 mm and with the pump connection Ø 75 mm.

(*) PVC pipe not included

List of fittings for the Tender 70 m3 model		
No	**DESCRIPTION**	**PCS**
1	Reduction sleeve 75 x 63 mm.	1
2	Ball valve Ø 63 mm.	1
3	Elbow 90o Ø 63 mm.	1
4	Conical reduction 90x75x63mm.	1
5	Elbow 90o Ø 75 mm.	2
6	Reduction sleeve 90 x 75 mm.	2
7	Ball valve Ø 75 mm.	1

PVC kit installation for 80 m3 / 95 m3 model:
Before gluing the elements, put them together without glue.
Installing the discharge line: (see figure below)

- connect the pipe Ø 75 mm to the housing connection.
- connect the valve Ø 75 mm (no. 1, fig. 7) with the pipe Ø 75 mm.
- connect the pipe Ø 75 mm with the valve Ø 75 mm (No. 1)
- connect the Ø 75 mm bend (No. 2) with the Ø 75 mm pipe.
- connect the pipe Ø 75 mm with the elbow (no. 2).
- connect the conical 90 / 75mm reduction (No. 3) with the Ø75 mm elbow (No. 2) and with the Ø75 mm pump connection.

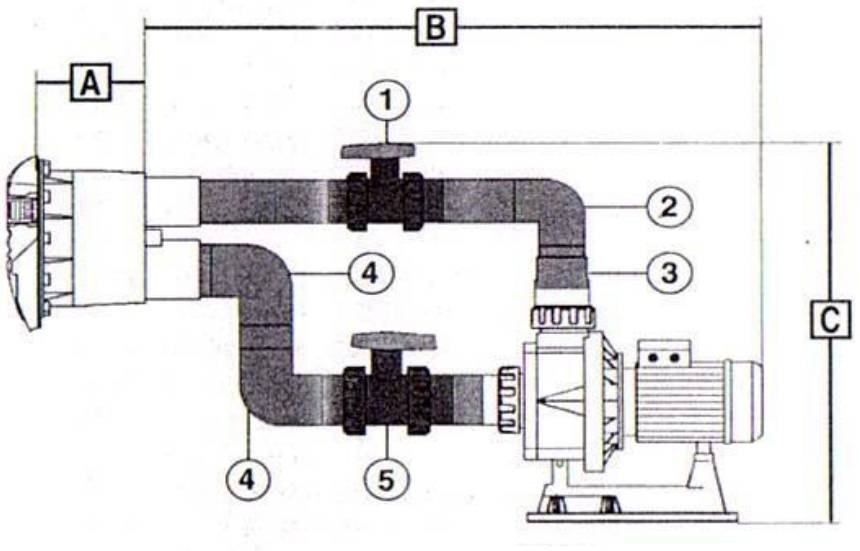

MODEL	A	B	C
80m3	165	1155	700
95m3	165	1165	700

Installing the suction line:
- use a Ø 90 mm pipe and connect the Ø 90 mm elbow (No. 4) to the suction connection of the housing.
- using a Ø 90 mm pipe, connect the second Ø 90 mm elbow (No. 4) with the already glued elbow.
- connect the valve Ø 90 mm (No. 5) with the elbow (No. 4), using a pipe Ø 90 mm.
- connect the pipe Ø 75 mm with the valve (no. 7) via a 90-75 reducer
- connect the short section of pipe Ø 75 mm with the pump connection Ø 75 mm.

(*) PVC pipe not included

PVC KIT UP TO 80 m3 / 95 m3		
No	**DESCRIPTION**	**PCS**
1	Ball valve Ø 75 mm.	1
2	Elbow 90o Ø 75 mm.	1
3	Conical reduction 90x75x63mm.	2
4	Elbow 90o Ø 90 mm.	2
5	Ball valve Ø 90 mm.	1

MINIMUM DIMENSIONS OF THE DEVICE

Before we start installing the TENDER device, we must check the place of installation in terms of its positioning and available dimensions, and make sure that there is not enough space at the time of installation. To do this, we check that the minimum dimensions are suitable for the model to be installed, in accordance with the values given in the table below and in the drawing. If the pump works in the shaft, install ventilation grilles and water drain in the floor.

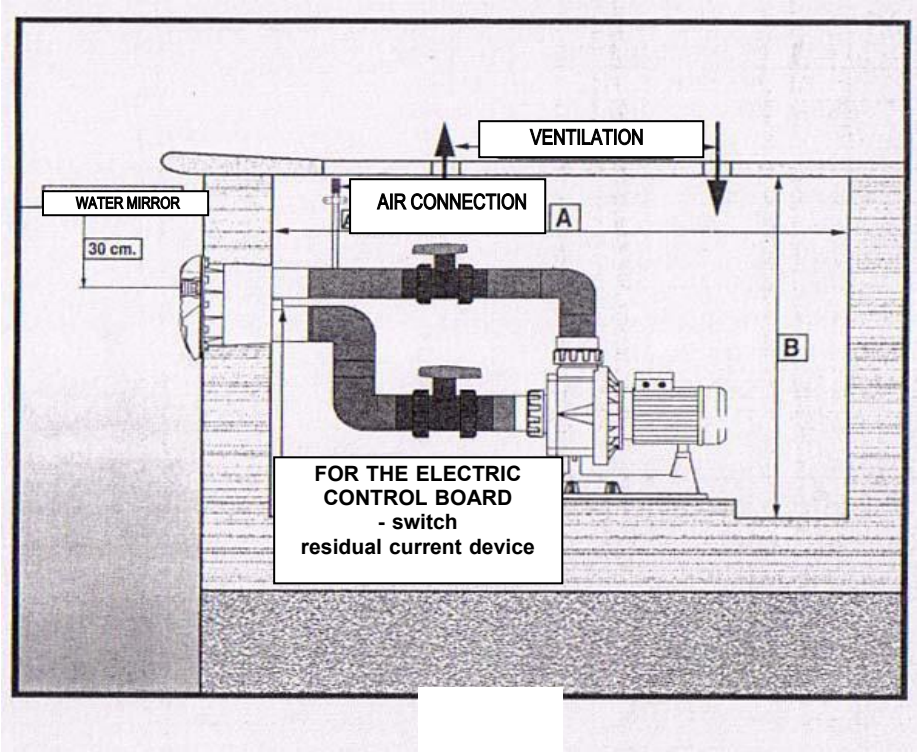

MINIMUM DIMENSIONS OF THE DEVICE			
MODEL	WIDTH	A	B
45m3	750	1420	1000
70m3	750	1570	1000
78m3	750	1580	1000

TENDER EXPOLATION AND SERVICE

As soon as the TENDER device is installed, your swimming pool changes, thanks to the pleasant impressions caused by the water current itself and the water and air stream from the device, into a relaxation and fun zone. The TENDER device is started while in the pool by pressing the pneumatic switch (No. 1). When the device is already running, we can set either the water stream itself or the stream of water mixed with air. We achieve this by operating the nozzle on the front of the device.

ELECTRICAL CONNECTION

CAUTION!


The electrical installation should be made in accordance with the general rules of the industry and the additionally applicable technical regulations by an authorized electrician-installer. The supply network must have a neutral conductor and be properly earthed.
The supply voltage must correspond to the voltage specified on the rating plate of the device. The diameter of the cables to be used should be such that they can withstand the current consumed by the device without any problems.
All metal parts of the device, which should be free of any voltage and are in the immediate vicinity of people, must be electrically connected to the grounding conductor of the network in order to avoid such accidents.
The electrical properties of the protections and their settings should be matched to the motors they protect and the conditions of their operation, moreover, the manufacturer's recommendations regarding operation should be adhered to (see the rating plate).
For configurations with three-phase induction motors, the motor winding bypass circuits must be set correctly.

The cable entries and outputs from the terminal box are made as cable glands in order to avoid the ingress of moisture and dirt, therefore they are equipped with watertight closures. The cables leading to the connections must be equipped with the appropriate terminal clamps.
The pneumatic control box should be installed in a dry place above the water level, not more than 4 meters from the switch on the front panel of the device.
The transparent pipe (No. 2) is connected to the relay on the upper right part of the board, it is very important to make sure that the pipe is not bent. The pneumatic control box consists of the following components:

- 1 thermo-magnetic switch
- 1 contactor
- 1 pneumatic switch,
- 1 control fuse.

All elements are mounted in a plastic cabinet with protection class IP 67.

Connection diagram in a three-phase system

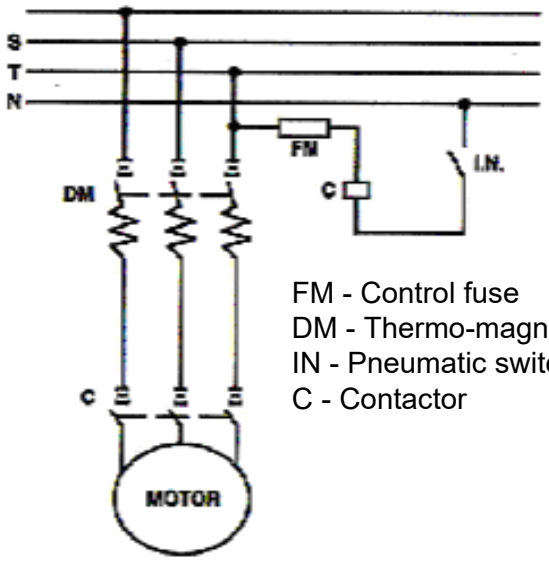

FM - Control fuse
DM - Thermo-magnetic switch
IN - Pneumatic switch
C - Contactor